*Fisher Engineering*

50 Gordon Drive, Rockland, Maine 04841-2139 • www.fisherplows.com

**89930, 89910**

October 1, 2024
Lit. No. 74147, Rev. 14

STEEL-CASTER™

# Hopper and Drive Components

## STEEL-CASTER™ Hopper Spreaders 0.35 yd$^3$ & 0.7 yd$^3$ For Half-Ton Trucks

### Parts List

This Parts List is for FISHER® STEEL-CASTER hopper spreaders with serial numbers beginning with 200706 and higher.

**A DIVISION OF FISHER, LLC**

## HOPPER COMPONENTS – 0.7 yd³

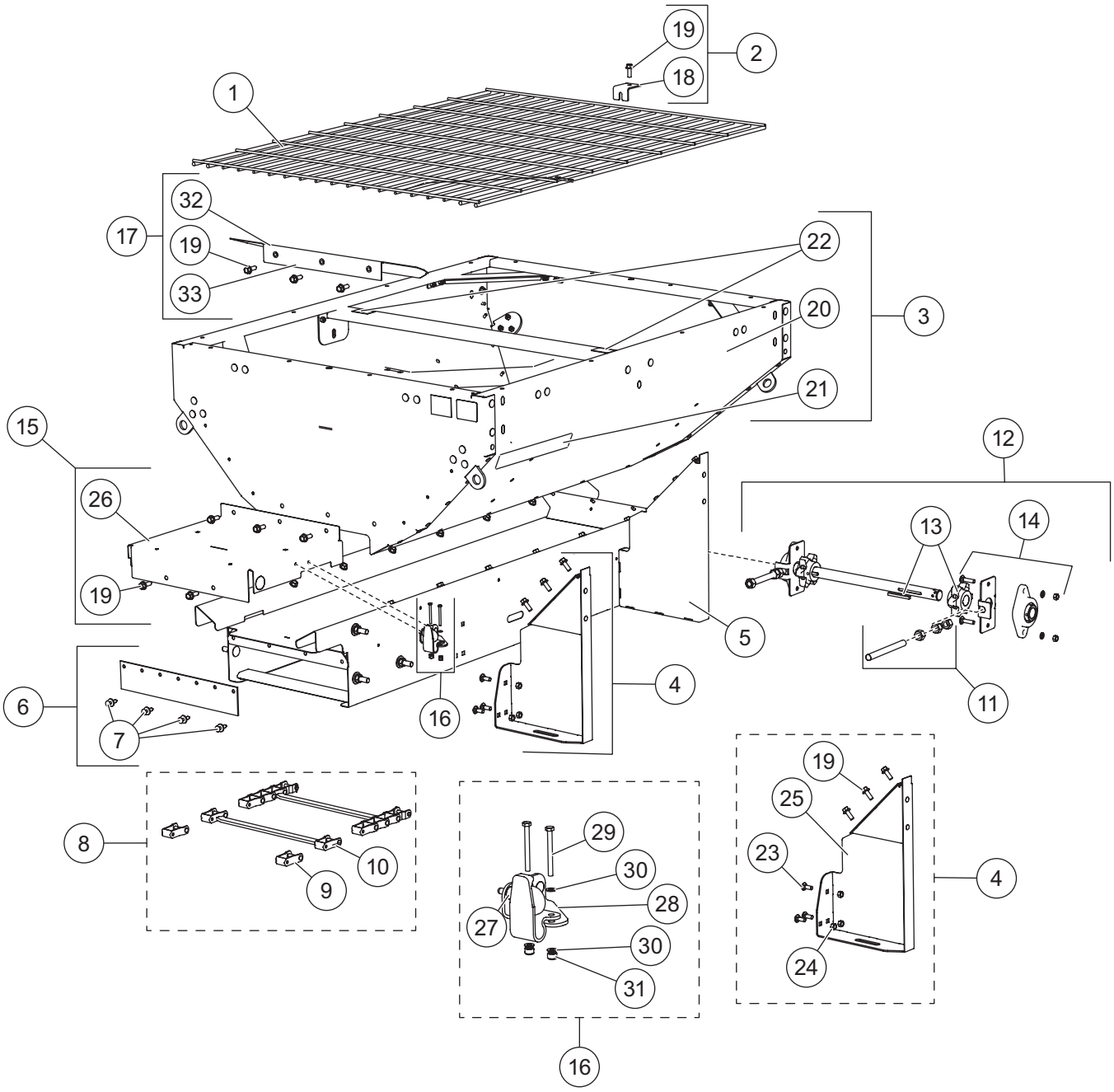

| 0.7 yd³ Hopper Components | | | | | | | |
|---|---|---|---|---|---|---|---|
| **Item** | **Part** | **Qty** | **Description** | **Item** | **Part** | **Qty** | **Description** |
| 1 | 74697 | 1 | Top Screen – 0.7 yd³ | 10 | 68492 | 1 | Conveyor Repair Bar w/Pins and Cotters |
| 2 | 83896 | 1 | Screen Attachment Kit | | | | |
| 3 | 83895 | 1 | Hopper Service Kit – 0.7 yd³ Chain | 11 | 99073 | 2 | Tensioner Bolt Kit |
| 4 | 83293 | 1 | Leg Service Kit A – 0.7 yd³ Chain | 12 | 99480 | 1 | Idler Shaft Assembly Kit |
| 5 | 83294 | 1 | Leg Service Kit B – 0.7 yd³ Chain | 13 | 99479 | 2 | 6-Tooth Sprocket Kit |
| 6 | 78266 | 1 | Wiper Replacement Kit | 14 | 94953 | 2 | Spreader Bearing Kit |
| 7 | 99079 | 1 | Rivet Kit, Steel Hopper Wiper (pkg of 4) | 15 | 83275 | 1 | Mixing Chamber Cover Kit |
| | | | | 16 | 83308 | 1 | Spinner Module Dust Cover |
| 8 | 74768 | 1 | Pintle Chain | 17 | 83276 | 1 | Tail-Side Doghouse Kit – 0.7 yd³ Chain |
| 9 | 68475 | 1 | Conveyor Repair Link w/Pins and Cotters | | | | |
| **Item 2** | | | **83896 Screen Attachment Kit** | | | | |
| 18 | | 2 | Top Screen Clamp | 19 | | 2 | 3/8-16 x 1 Hex Cap Screw SS |
| **Item 3** | | | **83895 Hopper Service Kit – 0.7 yd³ Chain** | | | | |
| 19 | | 24 | 3/8-16 x 1 Hex Cap Screw SS | 21 | 31594EN | 2 | Label – Warning/Caution, Spreaders |
| 20 | | 1 | Hopper Assembly – 0.7 yd³ | 22 | 67272 | 2 | Label – Caution, Do Not Lift |
| **Item 4** | | | **83293 Leg Service Kit A – 0.7 yd³ Chain** | | | | |
| 19 | | 3 | 3/8-16 x 1 Hex Cap Screw SS | 24 | | 3 | 3/8-16 Hex Locknut GB |
| 23 | | 3 | 3/8-16 x 1 Carriage Bolt | 25 | | 1 | Rib Assembly, Tail-Side |
| **Item 5** | | | **83294 Leg Service Kit B – 0.7 yd³ Chain** | | | | |
| 19 | | 3 | 3/8-16 x 1 Hex Cap Screw SS | 24 | | 3 | 3/8-16 Hex Locknut GB |
| 23 | | 3 | 3/8-16 x 1 Carriage Bolt | ns | | 1 | Rib Assembly, Cab-Side |
| **Item 15** | | | **83275 Mixing Chamber Cover Kit** | | | | |
| 19 | | 3 | 3/8-16 x 1 Hex Cap Screw SS | 26 | | 1 | Mixing Chamber Cover |
| **Item 16** | | | **83308 Spinner Module Dust Cover** | | | | |
| 27 | | 1 | Spinner Harness Boot Bracket | 31 | | 2 | #10-32 Hex Locknut GB |
| 28 | 11991 | 1 | Dust Cover, Spinner Plug | ns | | 2 | 1/4-20 x 3/4 Hex Cap Screw SS |
| 29 | | 2 | #10-32 x 2 Hex Cap Screw | ns | | 2 | 1/4-20 Hex Locknut GB |
| 30 | | 2 | #10 Flat Washer, Type A SS | | | | |
| **Item 17** | | | **83276 Tail-Side Doghouse Kit – 0.7 yd³ Chain** | | | | |
| 19 | | 3 | 3/8-16 x 1 Hex Cap Screw SS | 33 | | 3 | 3/8-16 Hex Rivnut SS |
| 32 | | 1 | Tail-Side Doghouse | | | | |
| SS = Stainless Steel | | | ns = not shown | | | | G = Grade |

## HOPPER COMPONENTS – 0.35 yd³

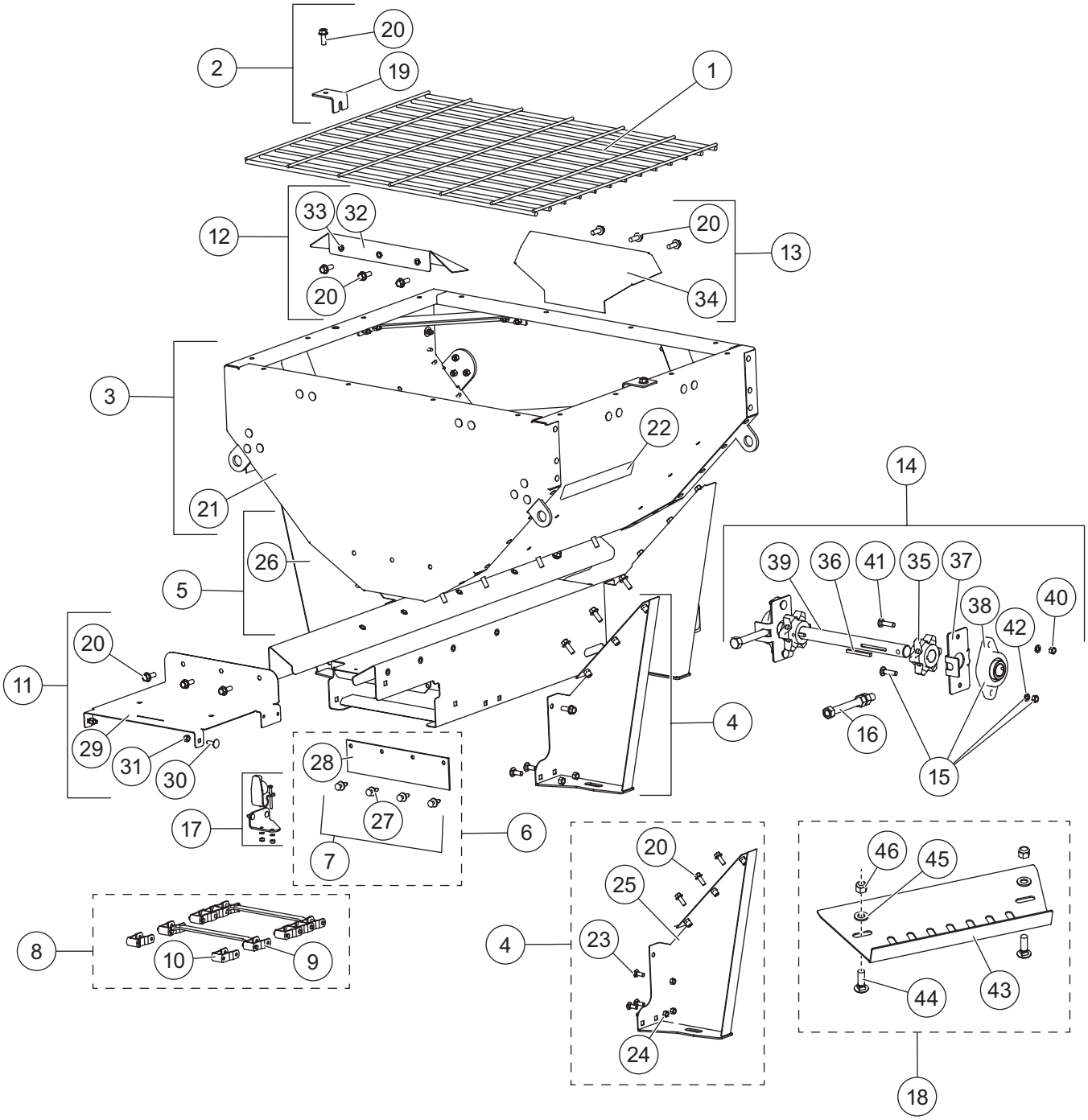

| 0.35 yd³ Hopper Components | | | | | | | |
|---|---|---|---|---|---|---|---|
| **Item** | **Part** | **Qty** | **Description** | **Item** | **Part** | **Qty** | **Description** |
| 1 | 74696 | 1 | Top Screen – 0.35 yd³ | 10 | 68475 | 1 | Conveyor Repair Link w/Pins & Cotters |
| 2 | 83896 | 1 | Screen Attachment Kit | 11 | 83268 | 1 | Mixing Chamber Cover Kit – 0.35 yd³ |
| 3 | 83265 | 1 | Hopper Service Kit – 0.35 yd³ | 12 | 83269 | 1 | Tail-Side Doghouse Kit – 0.35 yd³ |
| 4 | 83296 | 1 | Leg Service Kit A – 0.35 yd³ | 13 | 83271 | 1 | Cab-Side Doghouse Kit – 0.35 yd³ |
| 5 | 83297 | 1 | Leg Service Kit B – 0.35 yd³ | 14 | 83266 | 1 | Idler Shaft Assembly Kit – 0.35 yd³ |
| 6 | 83272 | 1 | Wiper Replacement Kit | 15 | 94953 | 2 | Spreader Bearing Kit |
| 7 | 99079 | 1 | Rivet Kit, Steel Hopper Wiper (pkg of 4) | 16 | 99073 | 2 | Tensioner Bolt Kit |
| 8 | 74758 | 1 | Conveyor Chain, 48-Link | 17 | 83308 | 1 | Spinner Module Dust Cover |
| 9 | 68375 | 1 | Conveyor Repair Bar w/Pins & Cotters | 18 | 85693 | 1 | Truck Conversion Kit |
| **Item 2** | | | **83896 Screen Attachment Kit** | | | | |
| 19 | | 2 | Top Screen Clamp | 20 | | 2 | 3/8-16 x 1 Hex Cap Screw SS |
| **Item 3** | | | **83265 Hopper Service Kit – 0.35 yd³** | | | | |
| 20 | | 22 | 3/8-16 x 1 Hex Cap Screw SS | 22 | 31594EN | 2 | Label – Warning/Caution, Spreaders |
| 21 | | 1 | Hopper Assembly – 0.35 yd³ | | | | |
| **Item 4** | | | **83296 Leg Service Kit A – 0.35 yd³** | | | | |
| 20 | | 4 | 3/8-16 x 1 Hex Cap Screw SS | 24 | | 2 | 3/8-16 Hex Locknut GB |
| 23 | | 2 | 3/8-16 x 1 Carriage Bolt | 25 | | 1 | Rib, PS – 0.35 yd³ |
| **Item 5** | | | **83297 Leg Service Kit B – 0.35 yd³** | | | | |
| 20 | | 4 | 3/8-16 x 1 Hex Cap Screw SS | 24 | | 2 | 3/8-16 Hex Locknut GB |
| 23 | | 2 | 3/8-16 x 1 Carriage Bolt | 26 | | 1 | Rib, DS – 0.35 yd³ |
| **Item 6** | | | **83272 Wiper Replacement Kit** | | | | |
| 27 | | 4 | Push Type Retainer | 28 | 74686 | 1 | Wiper Belt – 0.35 yd³ |
| **Item 11** | | | **83268 Mixing Chamber Cover Kit – 0.35 yd³** | | | | |
| 20 | | 3 | 3/8-16 x 1 Hex Cap Screw SS | 30 | | 2 | 5/16-18 x 1 Carriage Bolt |
| 29 | | 1 | Mixing Chamber Cover – 0.35 yd³ | 31 | | 2 | 5/16-18 Hex Locknut GB |
| **Item 12** | | | **83269 Tail-Side Doghouse Kit – 0.35 yd³** | | | | |
| 20 | | 3 | 3/8-16 x 1 Hex Cap Screw SS | 33 | | 3 | 3/8-16 Hex Rivnut SS |
| 32 | | 1 | Tail-Side Doghouse – 0.35 yd³ | | | | |
| **Item 13** | | | **83271 Cab-Side Doghouse Kit – 0.35 yd³** | | | | |
| 20 | | 3 | 3/8-16 x 1 Hex Cap Screw SS | 34 | | 1 | Cab-Side Doghouse – 0.35 yd³ |
| ns | | 3 | 3/8-16 Hex Rivnut SS | | | | |
| **Item 14** | | | **83266 Idler Shaft Assembly Kit – 0.35 yd³** | | | | |
| 35 | 65909 | 2 | Drive Sprocket Machining 6T | 39 | 74662 | 1 | Idler Shaft, 3' |
| 36 | 95076 | 2 | Brass Key, 2.75" | 40 | | 4 | 3/8-16 Hex Locknut SS |
| 37 | 99765 | 2 | Bearing Alignment Plate | 41 | | 4 | 3/8-16 x 1-1/2 Carriage Bolt |
| 38 | 94536 | 2 | 2-Bolt Flange Bearing, 1.125 ID | 42 | | 4 | 3/8 Flat Washer, Type A Wide SS |
| **Item 18** | | | **85693 Truck Conversion Kit** | | | | |
| 43 | | 1 | Leg Runner | 46 | | 2 | 5/8-11 Hex Locknut GB |
| 44 | | 2 | 5/8-11 x 2 Carriage Bolt G5 | ns | | 4 | Ratchet Strap |
| 45 | | 2 | 5/8 Flat Washer Type 1 | | | | |
| SS = Stainless Steel | | | ns = not shown | | | | G = Grade |

## POWERGROUP COMPONENTS – 0.7 yd³

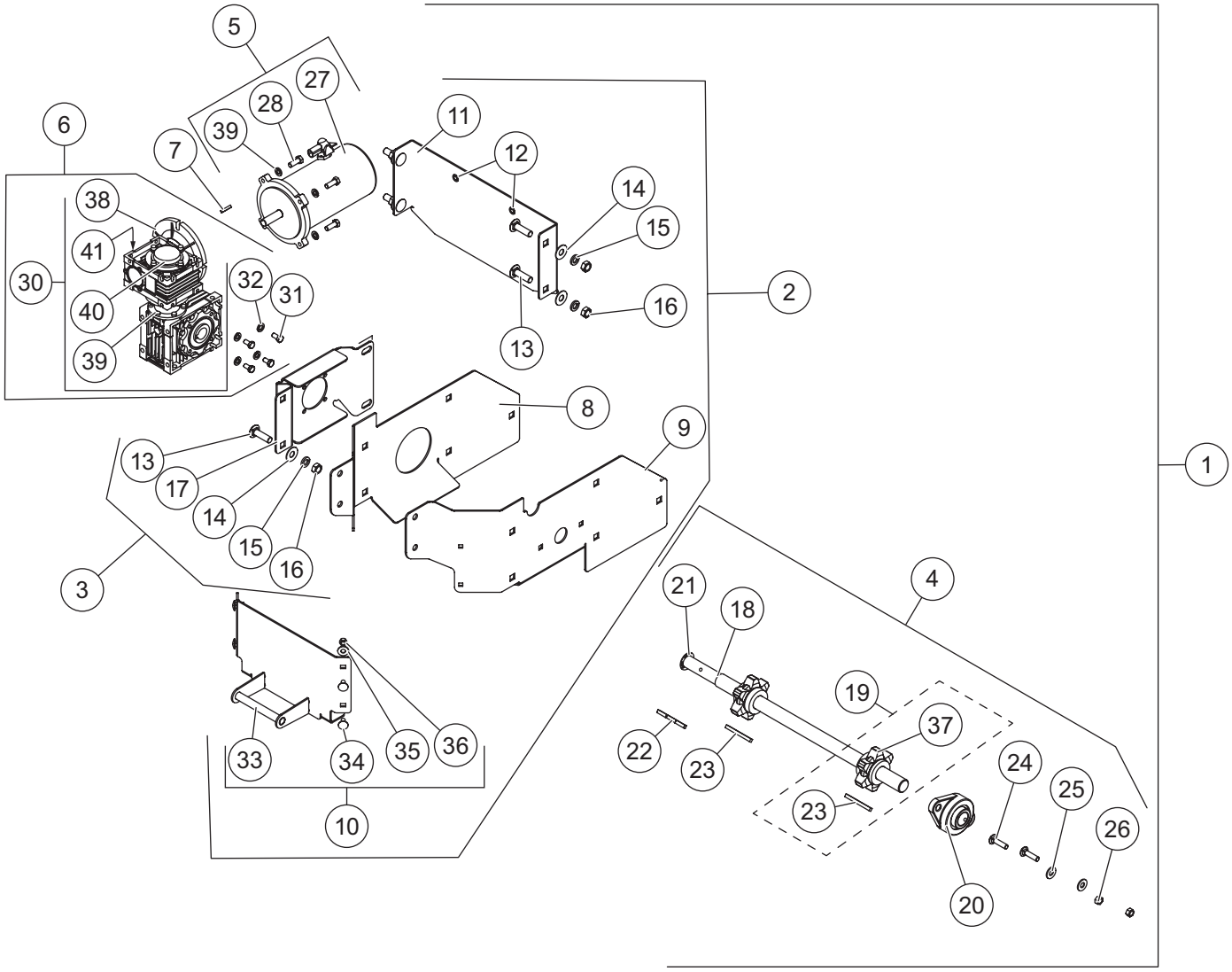

| Powergroup Components – 0.7 yd³ Chain Drive | | | | | | | |
|---|---|---|---|---|---|---|---|
| **Item** | **Part** | **Qty** | **Description** | **Item** | **Part** | **Qty** | **Description** |
| 1 | 99091 | 1 | Electric Conveyor Drive Kit | 5 | 99085 | 1 | Motor Kit, 1/2 hp |
| 2 | 83274 | 1 | Powergroup Mount Kit – 0.7 yd³ | 6 | 31549 | 1 | Transmission Kit |
| 3 | 83273 | 1 | Gear Box Bracket Kit – 0.7 yd³ | 7 | 65195 | 1 | Machine Key, 0.188 sq x 1.000 |
| 4 | 99094 | 1 | Drive Shaft Kit, Electric | | | | |
| **Item 2** | | | **83274 Powergroup Mount Kit – 0.7 yd³** | | | | |
| 8 | | 1 | Powergroup Side Plate – DS | 13 | | 10 | 1/2-13 x 3/4 Carriage Bolt SS |
| 9 | | 1 | Powergroup Side Plate – PS | 14 | | 10 | 1/2 Flat Washer Type A Wide SS |
| 10 | 30387 | 1 | Powergroup Mount Kit | 15 | | 10 | 1/2 Spring Lock Washer SS |
| 11 | | 1 | Powergroup Brace | 16 | | 10 | 1/2-13 Hex Nut SS |
| 12 | | 2 | 3/8-16 Hex Rivnut SS | | | | |
| **Item 3** | | | **83273 Gear Box Bracket Kit – 0.7 yd³** | | | | |
| 13 | | 4 | 1/2-13 x 3/4 Carriage Bolt SS | 16 | | 4 | 1/2-13 Hex Nut SS |
| 14 | | 4 | 1/2 Flat Washer Type A Wide SS | 17 | | 1 | Gear Box Mount Bracket |
| 15 | | 4 | 1/2 Spring Lock Washer SS | | | | |
| **Item 4** | | | **99094 Drive Shaft Kit, Electric** | | | | |
| 18 | | 1 | Drive Shaft | 23 | | 2 | 1/4 x 2-3/4 Machine Key |
| 19 | 99479 | 2 | 6-Tooth Sprocket Kit | 24 | | 2 | 3/8-16 x 1-1/2 Carriage Bolt SS |
| 20 | 94536 | 1 | Bearing, 1.125 ID 2-Bolt Flange | 25 | | 2 | 3/8 Flat Washer,Type A Wide SS |
| 21 | 330 | 1 | 1" Retaining Ring | 26 | | 2 | 3/8-16 Hex Nut SS |
| 22 | 99572 | 1 | 1/4 x 3 Machine Key | ns | | 2 | 3/8 Lock Washer SS |
| **Item 5** | | | **99085 Motor Kit, 1/2 hp** | | | | |
| 27 | D6825-1 | 1 | Motor, 1/2 hp, 1750 rpm | 29 | | 2 | 3/8 Spring Lock Washer SS |
| 28 | | 4 | 3/8-16 x 1 Hex Cap Screw SS | | | 2 | 3/8 Spring Lock Washer SS |
| **Item 6** | | | **31549 Transmission Kit** | | | | |
| 30 | 31098 | 1 | 10 x 10 2X Worm Gear Drive | 32 | | 4 | M8 Spring Lock Washer SS |
| 31 | | 4 | M8-1.25 x 16 Hex Cap Screw SS | | | | |
| **Item 10** | | | **30387 Powergroup Mount Kit** | | | | |
| 33 | | 1 | Chute Pin Guide | 35 | | 4 | 5/16 Flat Washer Type A Narrow |
| 34 | | 4 | 5/16-18 x 3/4 Carriage Bolt SS | 36 | | 4 | 5/16-18 Hex Locknut GB |
| **Item 19** | | | **99479 6-Tooth Sprocket Kit** | | | | |
| 23 | 99572 | 1 | 1/4 x 3 Machine Key | 37 | | 1 | Drive Sprocket 6T |
| **Item 30** | | | **31098 10 x 10 2X Worm Gear Drive** | | | | |
| | | 1 | Gear Box, 10 x 10 2X Worm Gear | 40 | 86792 | 1 | Gear Box Cover Kit, Primary |
| 38 | 31101 | 1 | Motor Flange | 41 | 86799 | 1 | Gear Box Cover Kit, Secondary |
| 39 | 31102 | 1 | Connector Flange | | | | |
| SS = Stainless Steel | | | G = Grade | | | | M = Metric |

## POWERGROUP COMPONENTS – 0.35 yd³

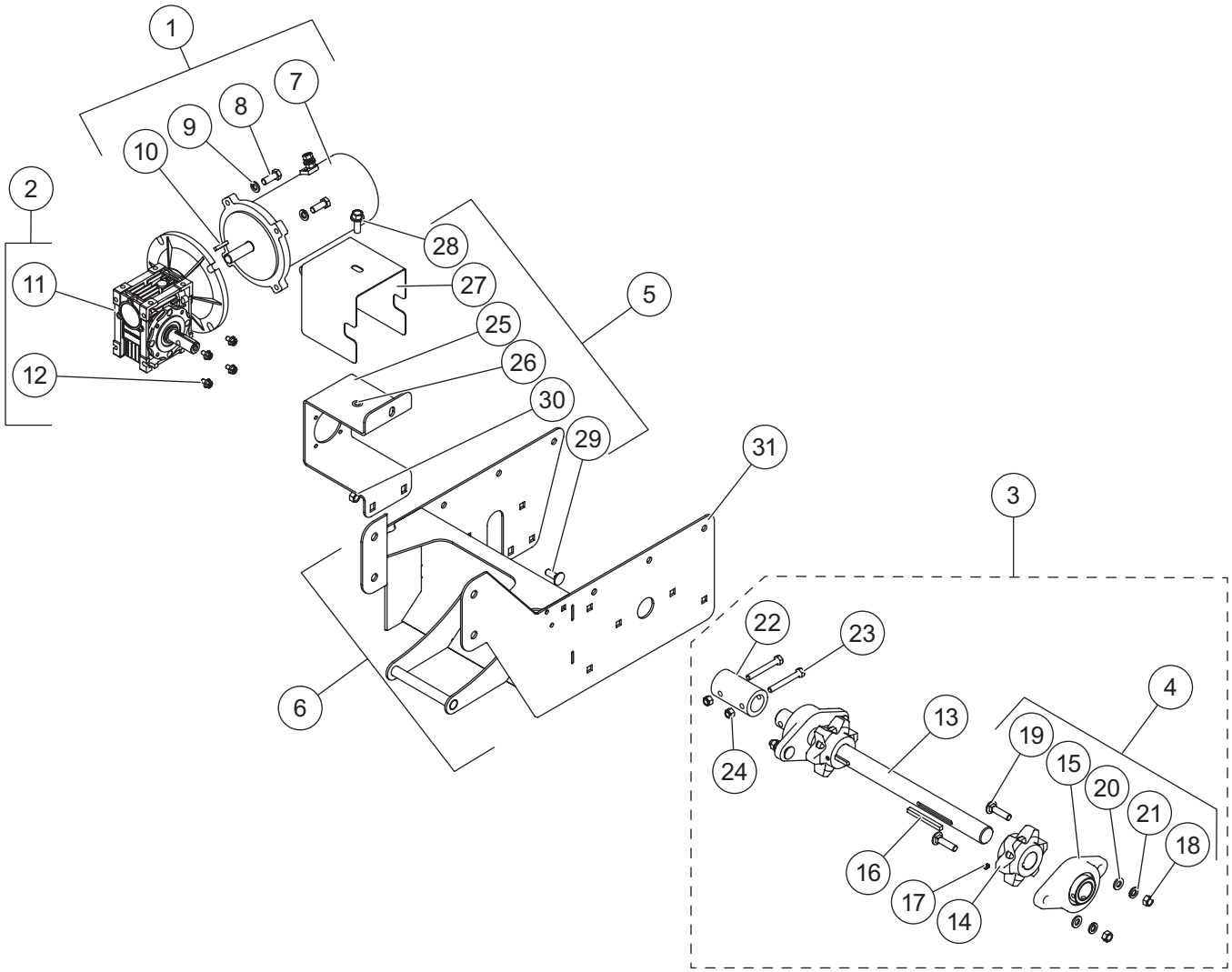

| Powergroup Components – 0.35 yd³ | | | | | | | |
|---|---|---|---|---|---|---|---|
| **Item** | **Part** | **Qty** | **Description** | **Item** | **Part** | **Qty** | **Description** |
| 1 | 85479 | 1 | Motor, 1/2 hp, 1750 rpm | 4 | 94953 | 2 | Spreader Bearing Kit |
| 2 | 83267 | 1 | Transmission Service Kit, 80:1 | 5 | 83263 | 1 | Gear Box Bracket Kit – 0.35 yd³ |
| 3 | 83264 | 1 | Drive Shaft Kit – 0.35 yd³ | 6 | 83262 | 1 | Powergroup Mount Kit – 0.35 yd³ |
| **Item 1** | | | **85479 Motor, 1/2 hp, 1750 rpm** | | | | |
| 7 | D6825-1 | 1 | Motor, 1/2 hp, 1750 rpm | 9 | | 4 | 3/8 Spring Lock Washer SS |
| 8 | | 4 | 3/8-16 x 1 Hex Cap Screw SS | 10 | 65195 | 1 | Machine Key, 0.188 sq x 1.000 |
| **Item 2** | | | **83267 Transmission Service Kit, 80:1** | | | | |
| 11 | 10923 | 1 | Transmission, 80:1 MRVC 040 | 12 | | 1 | M6-1 x 10 Flanged Hex Cap Screw |
| **Item 3** | | | **83264 Drive Shaft Kit – 0.35 yd³** | | | | |
| 13 | 74661 | 1 | Gear Box Shaft | 19 | | 4 | 3/8-16 x 1-1/2 Carriage Bolt |
| 14 | 65909 | 2 | Drive Sprocket Machining 6T | 20 | | 4 | 3/8 Flat Washer Type A Wide SS |
| 15 | 94536 | 2 | 2-Bolt Flange Bearing, 1.125 ID | 21 | | 4 | 3/8 Spring Lock Washer SS |
| 16 | 95076 | 2 | 2.75" Brass Key | 22 | 74678 | 1 | Drive Shaft Coupler – 0.35 yd³ |
| 17 | | 2 | 1/4-20 x 3/8 Socket Set Screw | 23 | | 2 | 5/16 x 2-1/4 Hex Cap Screw |
| 18 | | 4 | 3/8-16 Hex Nut SS | 24 | | 2 | 5/16-18 Hex Locknut GB |
| **Item 4** | | | **94953 Spreader Bearing Kit** | | | | |
| 15 | 94536 | 1 | 2-Bolt Flange Bearing, 1.125 ID | 20 | | 2 | 3/8 Flat Washer Type A Wide SS |
| 18 | | 2 | 3/8-16 Hex Nut SS | 21 | | 2 | 3/8 Spring Lock Washer SS |
| 19 | | 2 | 3/8-16 x 1-1/2 Carriage Bolt | | | | |
| **Item 5** | | | **83263 Gear Box Bracket Kit – 0.35 yd³** | | | | |
| 25 | | 1 | Gear Box Mount Bracket – 0.35 yd³ | 28 | | 2 | 3/8-16 x 1 Hex Cap Screw, SS |
| 26 | | 1 | 3/8-16 Hex Rivnut SS | 29 | | 2 | 3/8-16 x 1 Carriage Bolt |
| 27 | | 1 | Motor Coupler Guard | 30 | | 2 | 3/8-16 Hex Locknut GB |
| **Item 6** | | | **83262 Powergroup Mount Kit – 0.35 yd³** | | | | |
| 31 | | 1 | Chain Powergroup Mount – 0.35 yd³ | ns | | 2 | 3/8-16 x 1 Carriage Bolt |
| ns | | 6 | 3/8-16 x 1 Hex Cap Screw, SS | ns | | 2 | 3/8-16 Hex Locknut GB |
| SS = Stainless Steel | | | G = Grade | ns = not shown | | | M = Metric |

## CHUTE & SPINNER DRIVE ASSEMBLY COMPONENTS – 0.7 yd³ & 0.35 yd³

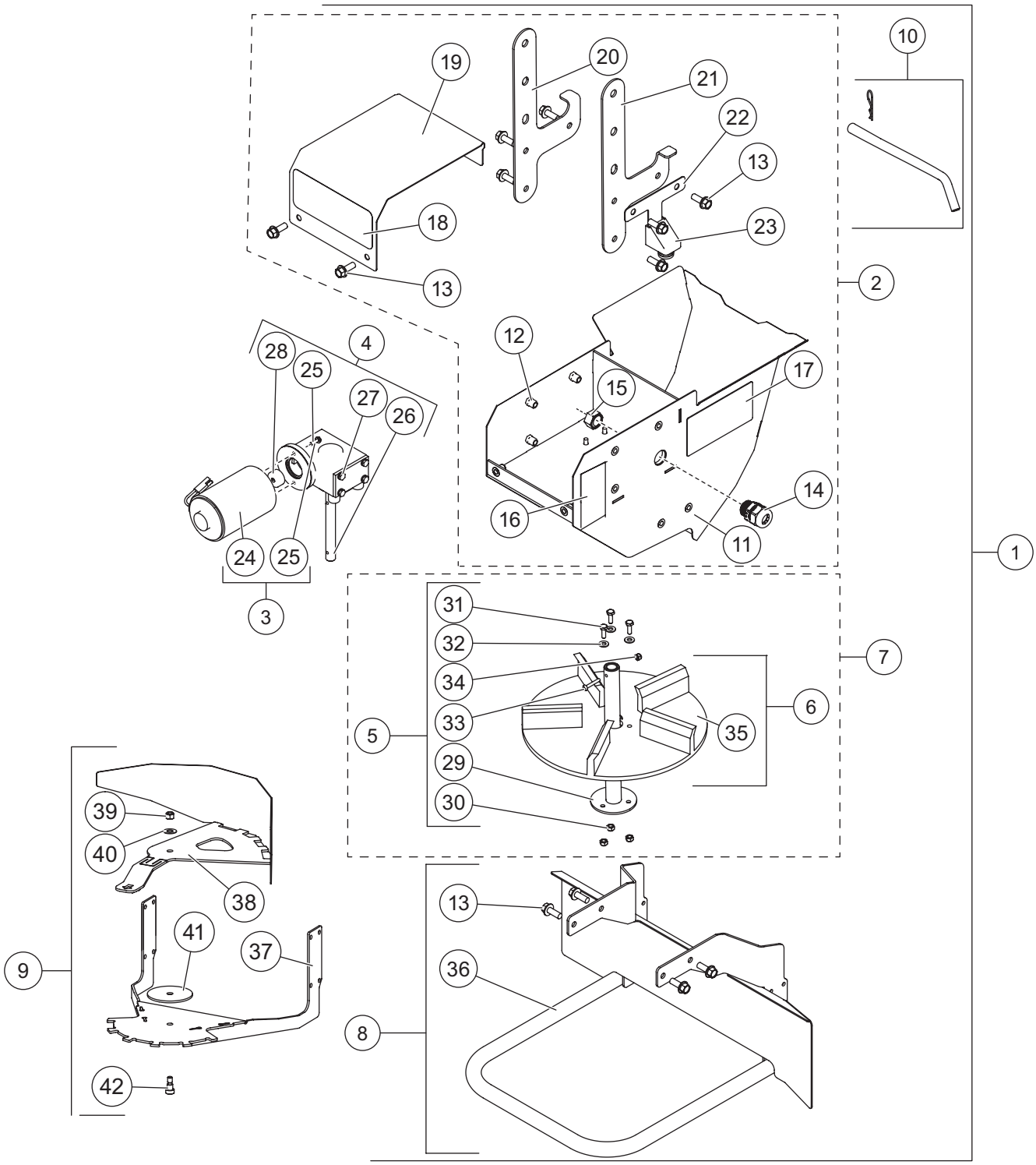

| Chute & Spinner Drive Assembly Components | | | | | | | |
|---|---|---|---|---|---|---|---|
| **Item** | **Part** | **Qty** | **Description** | **Item** | **Part** | **Qty** | **Description** |
| 1 | 83890 | 1 | Chute Assembly | 6 | 85438 | 1 | Spinner Disk Service Kit |
| 2 | 83888 | 1 | Spinner Drive Housing | 7 | 83887 | 1 | Spinner Disk and Mount Kit |
| 3 | 75901 | 1 | Spinner Motor Service Kit | 8 | 85437 | 1 | Spinner Guard Service Kit |
| 4 | 83722 | 1 | Spinner Transmission Kit | 9 | 83270 | 1 | Shutter Accessory, Chute |
| 5 | 83889 | 1 | Spinner Mount Kit | | | | |
| **Item 1** | | | **83890 Chute Assembly** | | | | |
| | 74690 | 1 | Spinner Drive Assembly | 10 | 30879 | 2 | Chute Pin Kit |
| **Item 2** | | | **83888 Spinner Drive Housing** | | | | |
| 11 | | 1 | Chute Motor Enclosure | 18 | 30917EN | 1 | Label – Warning, No Step |
| 12 | | 12 | 3/8-16 Hex Rivnut SS | 19 | | 1 | Chute Motor Cover |
| 13 | | 12 | 3/8-16 x 1 Serrated Flange Hex Cap Screw SS | 20 | 91639 | 1 | Chute Hanger, DS |
| | | | | 21 | 91641 | 1 | Chute Hanger, PS |
| 14 | | 1 | 10/2 3/4 NPT Strain Relief | 22 | | 1 | Cable Boot Bracket |
| 15 | | 1 | 3/4 Nut, Nylon | 23 | 11992 | 1 | Dust Cover, Spinner Harness |
| 16 | 32593EN | 2 | Label – Warning, Multiple Pinch Points | ns | 11100 | 1 | Label – Warning, Rear Camera |
| 17 | 92969 | 1 | Label – Warning, Chute Disconnect | | | | |
| **Item 3** | | | **75901 Spinner Motor Service Kit** | | | | |
| 24 | 72690 | 1 | Motor | 25 | | 2 | #10-32 x 5/8 Hex Cap Screw |
| **Item 4** | | | **83722 Spinner Transmission Kit** | | | | |
| 25 | | 2 | #10-32 x 5/8 Hex Cap Screw | 27 | | 4 | 1/4-20 x 1/2 Hex Cap Screw |
| 26 | D6107 | 1 | Worm Transmission 8:1, 5.9" Shaft | 28 | D6232 | 1 | Motor Drive Coupler |
| **Item 5** | | | **83889 Spinner Mount Kit** | | | | |
| 29 | | 1 | Spinner Hub | 32 | | 3 | 1/4 Flat Washer Type A Narrow |
| 30 | | 3 | 1/4-20 Hex Locknut GB | 33 | | 2 | #10-32 x 2 Hex Cap Screw |
| 31 | | 3 | 1/4-20 x 3/4 Hex Cap Screw SS | 34 | | 2 | #10-32 Hex Locknut GB |
| **Item 6** | | | **85438 Spinner Disk Service Kit** | | | | |
| 35 | D6823 | 1 | 12 x 5/8 Spinner | ns | | 3 | 1/4 Flat Washer SS |
| ns | | 3 | 1/4-20 x 1 Serrated Flange Hex Cap Screw SS | ns | | 3 | 1/4-20 Nylon Nut |
| **Item 7** | | | **83887 Spinner Disk and Mount Kit** | | | | |
| 5 | 83889 | 1 | Spinner Mount Kit | 6 | 85438 | 1 | Spinner Disk Service Kit |
| **Item 8** | | | **85437 Spinner Guard Service Kit** | | | | |
| 13 | | 4 | 3/8-16 x 1 Serrated Flange Hex Cap Screw SS | 36 | | 1 | Deflector |
| **Item 9** | | | **83270 Shutter Accessory, Chute** | | | | |
| 30 | | 4 | 1/4-20 Hex Locknut GB | 39 | | 1 | 5/16-18 Hex Locknut GB SS |
| 31 | | 4 | 1/4-20 x 3/4 Hex Cap Screw SS | 40 | | 1 | 3/8 Flat Washer SS |
| 37 | | 1 | Shutter Mount | 41 | | 1 | Plastic Washer |
| 38 | | 1 | Shutter Deflector | 42 | | 1 | 3/8 x 5/16 x 5/16-18 Shoulder Bolt SS |
| **Item 10** | | | **30879 Chute Pin Kit** | | | | |
| | | 1 | Chute Locking Pin | | | 1 | 3/32 x 2-1/4 Hairpin Cotter |
| G = Grade | | | SS = Stainless Steel | | | | ns = not shown |

## ELECTRICAL ENCLOSURE ASSEMBLY – 0.7 yd³ & 0.35 yd³

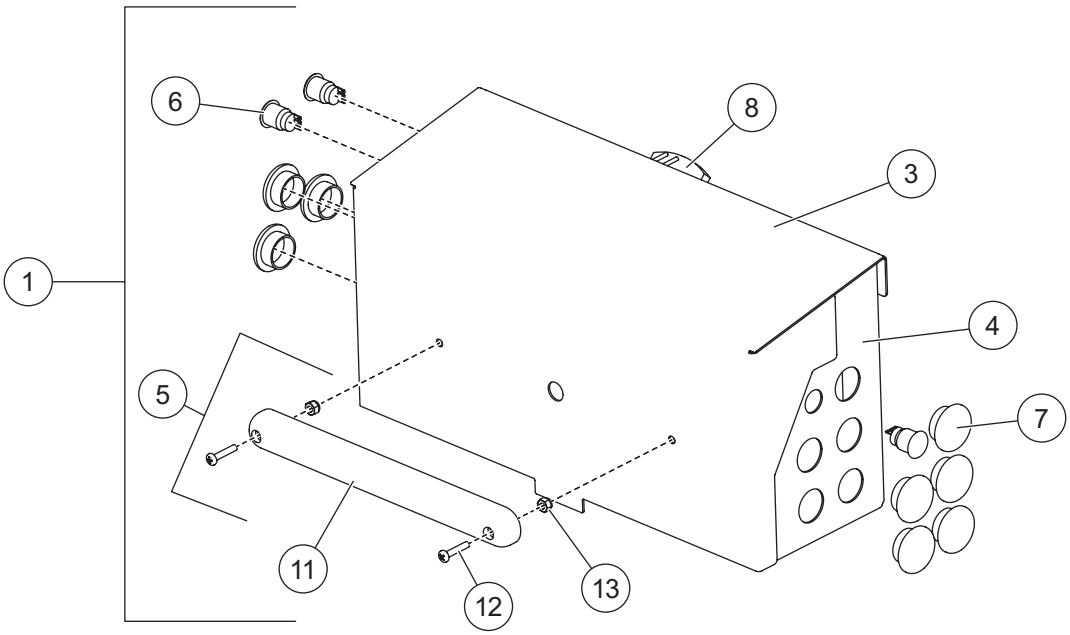


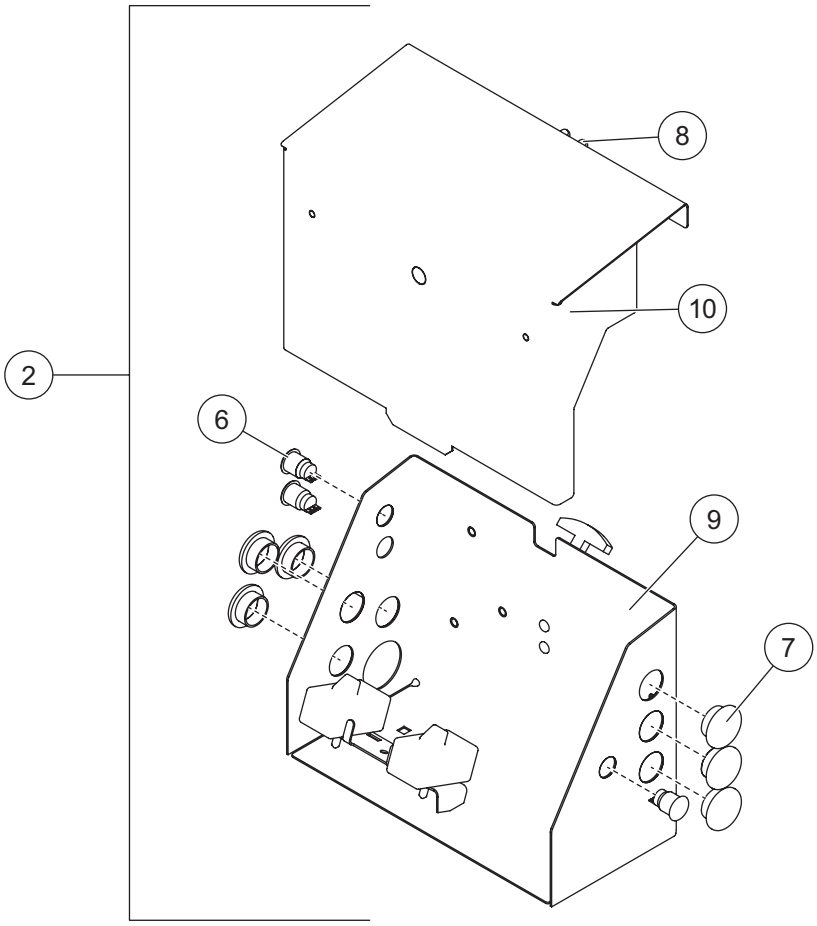

| Electrical Enclosure Components | | | | | | | |
|---|---|---|---|---|---|---|---|
| **Item** | **Part** | **Qty** | **Description** | **Item** | **Part** | **Qty** | **Description** |
| 1 | 83299 | 1 | Electrical Box Assembly – 0.7 $yd^3$ | 2 | 83292 | 1 | Electrical Box Assembly – 0.35 $yd^3$ |
| **Item 1** | | | **83299 Electrical Box Assembly – 0.7 $yd^3$** | | | | |
| 3 | | 1 | Mailbox Cover | 8 | | 1 | Keeper |
| 4 | | 1 | Electrical Enclosure – 0.7 $yd^3$ | ns | | 1 | Rubber Latch Assembly |
| 5 | 99080 | 1 | CHMSL Kit | ns | | 4 | 3/16 Pop Rivet |
| 6 | 99254 | 3 | Switch, Push Button MO | ns | 85480 | 1 | Label – Information, Feed/Work Light |
| 7 | 99195 | 8 | Break-Thru Plug | ns | 85481 | 1 | Label – Information, Feed Light |
| **Item 2** | | | **83292 Electrical Box Assembly – 0.35 $yd^3$** | | | | |
| 6 | 99254 | 3 | Switch, Push Button MO | ns | | 1 | Rubber Latch Assembly |
| 7 | 99195 | 6 | Break-Thru Plug | ns | | 4 | 3/16 Pop Rivet |
| 8 | | 1 | Keeper | ns | 85480 | 1 | Label – Information, Feed/Work Light |
| 9 | | 1 | Electrical Enclosure – 0.35 $yd^3$ | ns | 85481 | 1 | Label – Information, Feed Light |
| 10 | | 1 | Mailbox Cover – 0.35 $yd^3$ | | | | |
| **Item 5** | | | **99080 CHMSL Kit** | | | | |
| 11 | | 1 | CHMSL w/8" Lead | 13 | | 2 | #10-32 Hex Locknut GB SS |
| 12 | | 2 | #10-32 x 1 Machine Screw | | | | |
| G = Grade | | | SS = Stainless Steel | | | | ns = not shown |

## ELECTRICAL COMPONENTS – 0.7 yd³ & 0.35 yd³

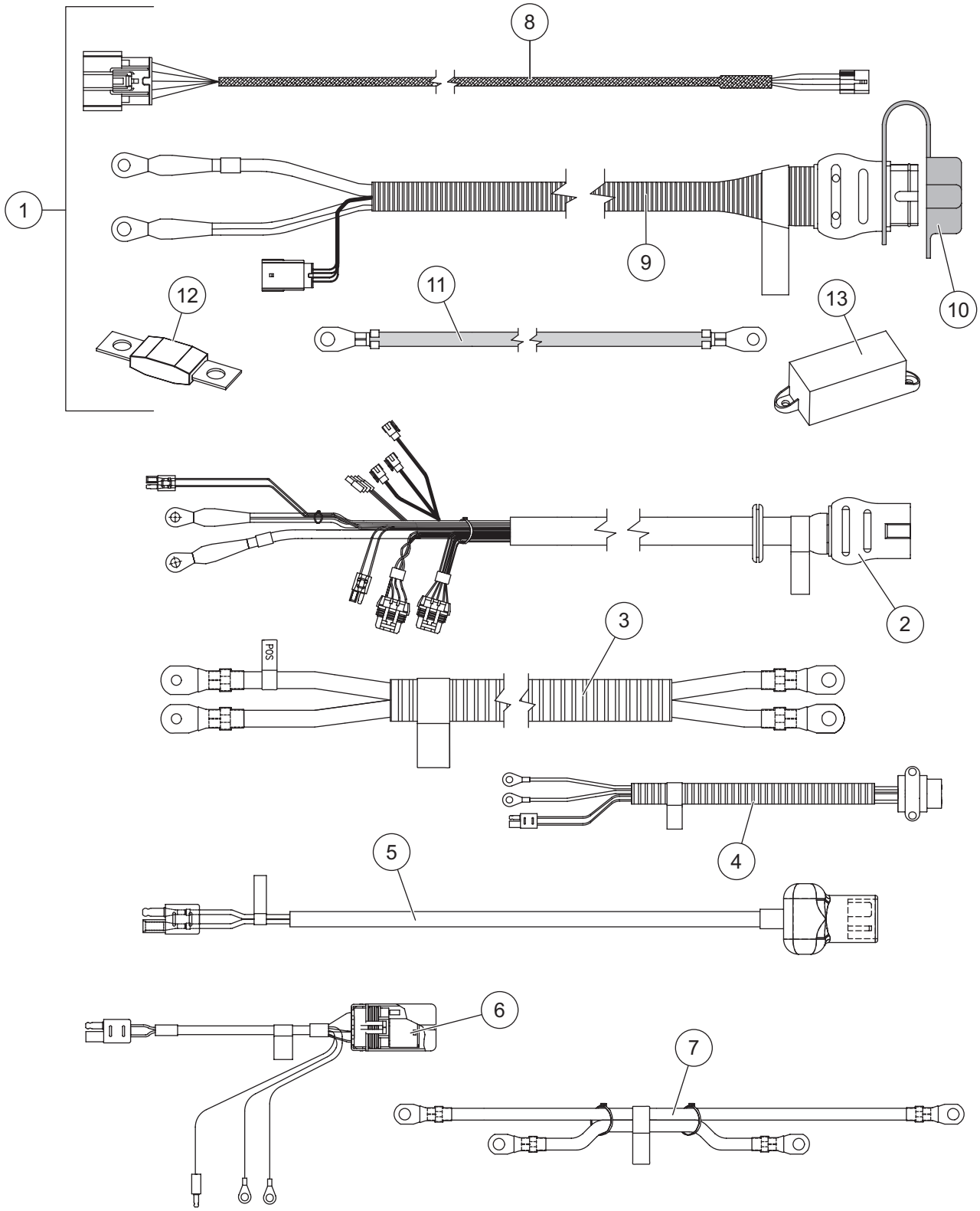


**Not drawn to scale.**

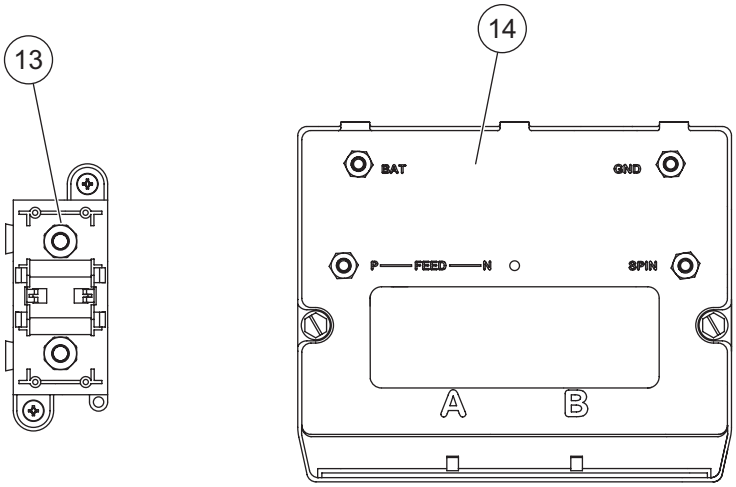


| Cables & Harnessing, Electrical Components | | | | | | | |
|---|---|---|---|---|---|---|---|
| **Item** | **Part** | **Qty** | **Description** | **Item** | **Part** | **Qty** | **Description** |
| 1 | 78402 | 1 | Vehicle-Side Harness Kit, 300" | 6 | 78382 | 1 | Vibrator Harness Assembly |
| | 85692 | 1 | Vehicle-Side Harness Kit, 140" | 7 | 78385 | 1 | Module to Isolated Stud Cable Assy |
| 2 | 83688 | 1 | Hopper Cable Assembly | ns | 83712 | 1 | Vibrator Extension Harness, 24" |
| 3 | 78987 | 1 | Module to Auger Motor Cable Assy | ns | 69916 | 1 | 8-Pin Cable Boot |
| 4 | 85448 | 1 | Spinner Module Cable Assembly | ns | 61592 | 1 | Butt Splice |
| 5 | 78883 | 1 | Spinner Motor Cable Assembly | | | | |
| **Item 1** | | | **78402 Vehicle-Side Harness Kit, 300"** | | | | |
| 8 | 69902 | 1 | Vehicle Control Harness | 12 | 95836 | 1 | Fuse, 100A |
| 9 | 83690 | 1 | Vehicle Harness Assy (incl. item 10) | 13 | 95837 | 2 | Fuse Holder/Isolated Stud Block |
| 10 | 99759 | 1 | Plug Cover | ns | | 6 | Cable Tie, HD |
| 11 | 22511 | 1 | 22" Battery Cable – Red | ns | | 10 | Cable Tie, 15.35" |
| **Electrical Box Components** | | | | | | | |
| 13 | 95837 | 1 | Fuse Holder/Isolated Stud Block | 14 | 52385 | 1 | Spreader Module, 4-Post |
| **ns = not shown** | | | | | | | |

## CAB CONTROL

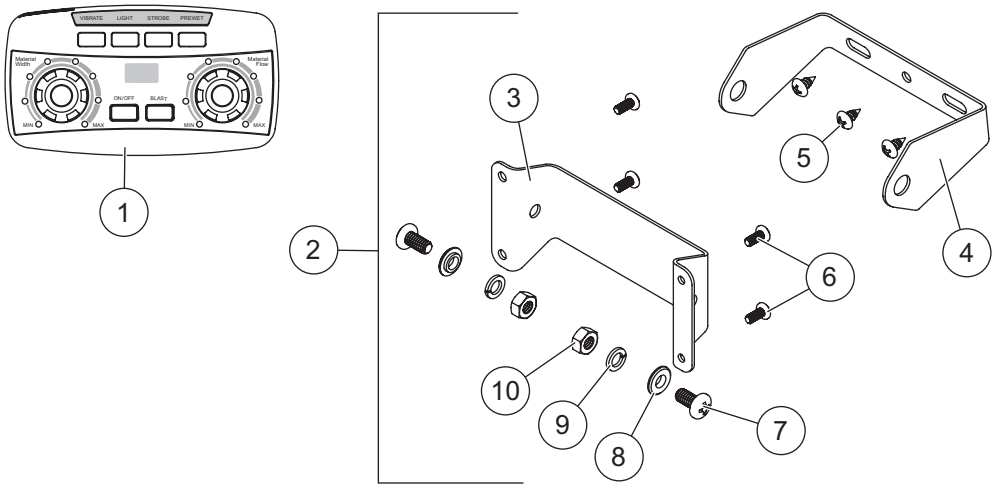


| 99533 Cab Control Kit | | | | | | | |
|---|---|---|---|---|---|---|---|
| **Item** | **Part** | **Qty** | **Description** | **Item** | **Part** | **Qty** | **Description** |
| 1 | 99773 | 1 | Cab Control, 2-Knob | 2 | 52345 | 1 | Cab Control Bracket Kit |
| **Item 2** | | | **52345 Cab Control Bracket Kit** | | | | |
| 3 | | 1 | Bracket, Control Inner | 7 | | 2 | 1/4-20 x 1/2 Pan Head Machine Screw SS – Black Oxide |
| 4 | | 1 | Bracket, Control Outer | | | | |
| 5 | | 3 | #10 x 3/8 Tapping Screw SS | 8 | | 2 | 1/4 Shoulder Washer – Black Oxide |
| 6 | | 4 | #8-32 x 3/8 Phillips Pan Head Machine Screw | 9 | | 2 | 1/4 Lock Washer SS |
| | | | | 10 | | 2 | 1/4-20 Hex Nut G5 – Black Oxide |
| G = Grade | | | | SS = Stainless Steel | | | |

## ACCESSORIES

| Accessory Kits | | | |
|---|---|---|---|
| **Part** | **Description** | **Part** | **Description** |
| 99494-1 | Strobe Light Kit | 85696 | Spill Guards – 0.35 $yd^3$ |
| 99505-1 | Primary Work Light Kit | 85697 | Spill Guards – 0.7 $yd^3$ |
| 99732-1 | Auxiliary Work Light Kit | 85698 | Side Extensions – 0.35 $yd^3$ |
| 85694 | License Plate Kit | 85699 | Side Extensions – 0.7 $yd^3$ |
| 11763-1 | Grease Point Kit (0.7 $yd^3$ only) | 85706 | Inverted V Kit – 0.35 $yd^3$ |
| 76668-1 | Vibrator Kit | 85707 | Inverted V Kit – 0.7 $yd^3$ |
| 85692 | Vehicle-Side Harness Kit – 0.35 $yd^3$ | 30059 | Tarp Kit – 0.35 $yd^3$ |
| 78402 | Vehicle-Side Harness Kit – 0.7 $yd^3$ | 30061 | Tarp Kit – 0.7 $yd^3$ |
| 68790 | Ratchet Strap Kit (pkg of 4) | 30055 | Bungee Kit, 9" – 0.35 $yd^3$ |
| 85695 | Pre-Wet, 50-gal | 30056 | Bungee Kit, 15" – 0.7 $yd^3$ |
| 99080 | CHMSL Kit | | |

Fisher Engineering
50 Gordon Drive
Rockland, ME 04841-2139
*www.fisherplows.com*

**A DIVISION OF FISHER, LLC**

Copyright © 2024 Douglas Dynamics, LLC. All rights reserved. This material may not be reproduced or copied, in whole or in part, in any printed, mechanical, electronic, film, or other distribution and storage media, without the written consent of Fisher Engineering. Authorization to photocopy items for internal or personal use by Fisher Engineering outlets or spreader owner is granted.

Fisher Engineering reserves the right under its product improvement policy to change construction or design details and furnish equipment when so altered without reference to illustrations or specifications used. Fisher Engineering or the vehicle manufacturer may require or recommend optional equipment for spreaders. Do not exceed vehicle ratings with a spreader. Fisher Engineering offers a limited warranty for all spreaders and accessories. See separately printed page for this important information. The following are registered (®) or unregistered (™) trademarks of Douglas Dynamics, LLC: FISHER®, STEEL-CASTER™.

**Printed in U.S.A.**